Data Sheet

Article number: 03209035
Description: Fluro Rod End GILSW 35
Zinc Plated with left-handed thread

Measures

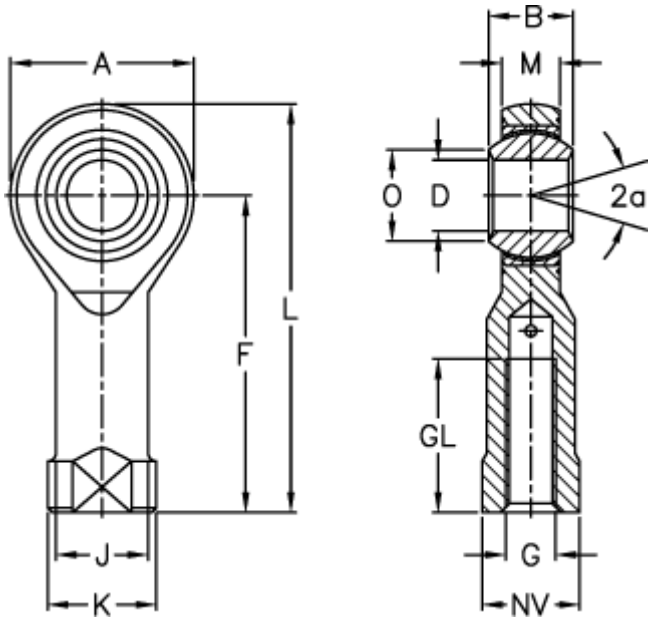

A	= 80	J	= 46	Weight (g) = 1600
a (degrees)	= 19	K	= 58	
B	= 43	L	= 165	
D	= 35	M	= 28	
Dynamic load C (kN)	= 206	NV	= 50	
F	= 125	O	= 37.7	
G	= M36x2	Permissible rpm	= 110	
GL	= 56	Static load C0 (kN)	= 101	

Product drawings and brochures of any kind may contain errors for which Brd. Klee A/S cannot be liable.